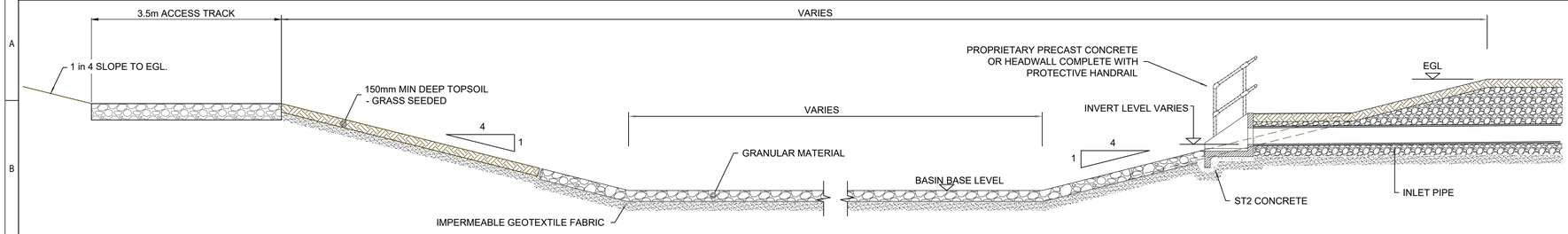

TYPICAL CROSS-SECTION THROUGH SUDS BASIN

SCALE 1:50

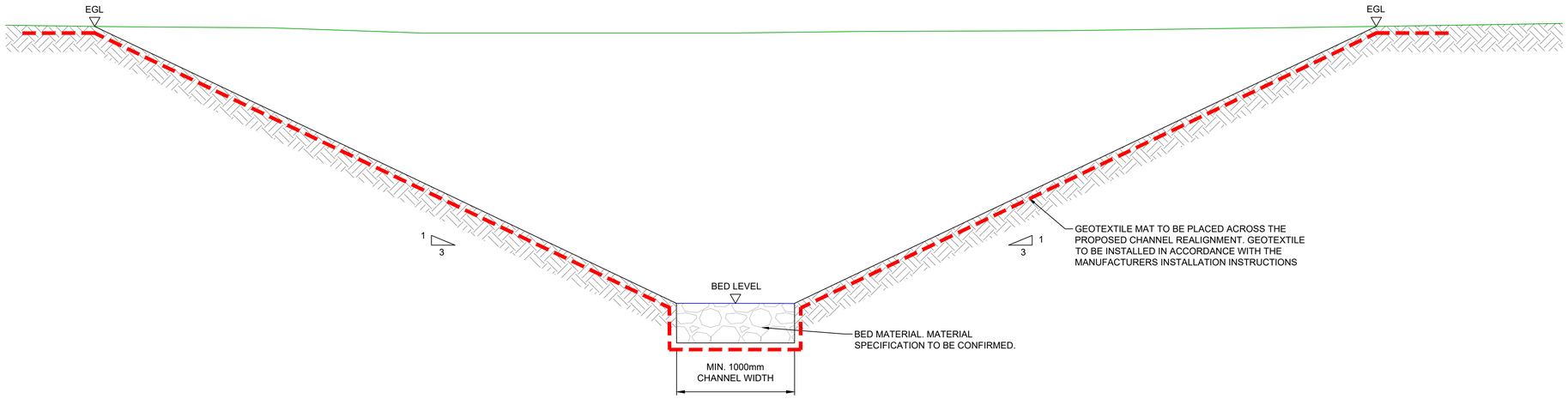

TYPICAL SECTION THROUGH WATERCOURSE REALIGNMENT CHANNEL

SCALE 1:20

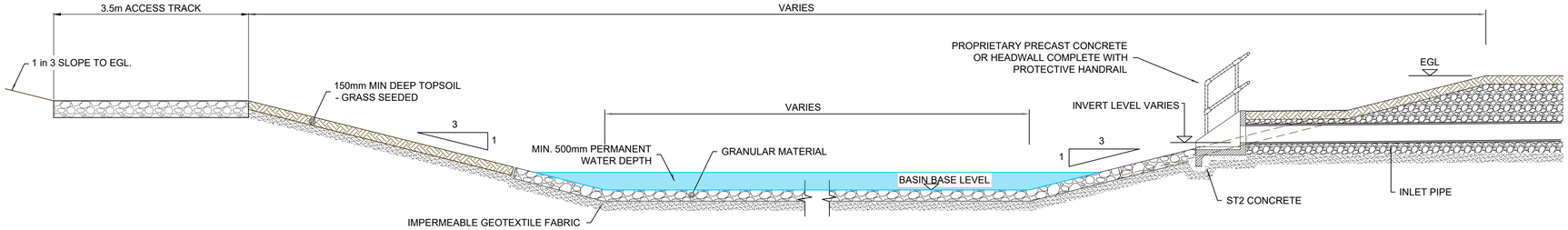

TYPICAL CROSS-SECTION THROUGH SETTLEMENT LAGOONS

SCALE 1:50

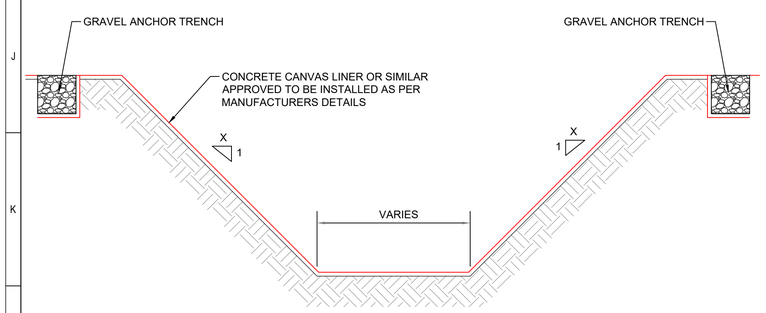

DITCH

SCALE 1:20

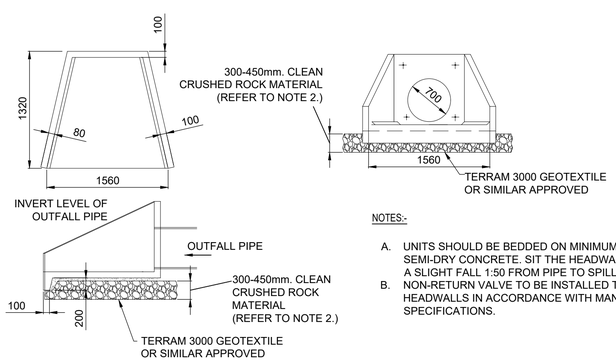

NOTES:-

A. UNITS SHOULD BE BEDDED ON MINIMUM 100mm OF SEMI-DRY CONCRETE. SIT THE HEADWALL LEVEL WITH A SLIGHT FALL 1:50 FROM PIPE TO SPILL MOUTH.

B. NON-RETURN VALVE TO BE INSTALLED TO ALL HEADWALLS IN ACCORDANCE WITH MANUFACTURERS SPECIFICATIONS.

TYPICAL PRECAST HEADWALL / OUTFALL DETAIL-ALTHON (OR SIMILAR APPROVED)

(SCALE 1:50)

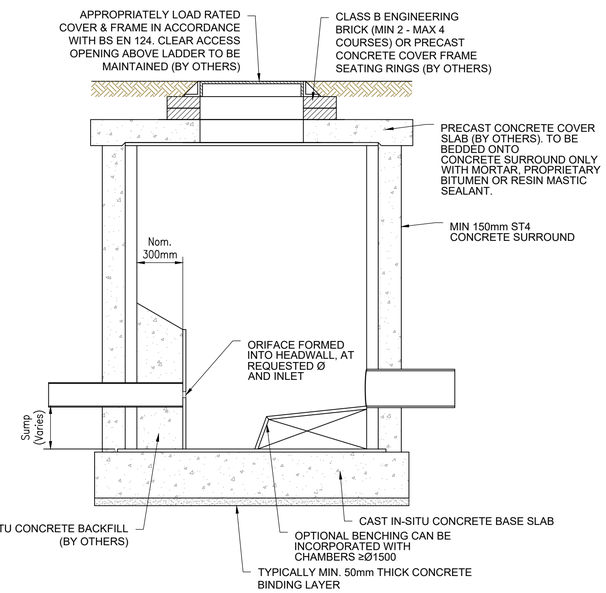

TYPICAL ORIFACE FLOW CONTROL CHAMBER

(SCALE 1:20)

METRES @ 1:50: 0 0.5 1 2 5

METRES @ 1:20: 0 0.2 0.5 1 2

This map is based upon Ordnance Survey material with the permission of Ordnance Survey on behalf of the Controller of His Majesty's Stationery Office © Crown copyright and database rights 2025 Ordnance Survey 0100031673. Any unauthorised reproduction infringes Crown copyright and may lead to prosecution or civil proceedings.

NOTES

1. The proposals shown on this drawing have been determined from topographical survey information provided by others
2. Site layout based on drawing Fasnakyle - Site D alternative Siemens BAM layout
3. Substation layout based on S345-SEL-V00-XX-M3-C-5001.rvt.
4. Design proposals shown are preliminary and subject to detailed design.
5. All dimensions in mm unless stated otherwise.
6. Refer to design decision log for assumptions associated with proposed design.
7. Tie-in locations to existing watercourse to be confirmed.
8. The contractor shall check all dimensions on site and report any difference to the designer
9. All levels are in metres (m) above ordnance datum unless stated otherwise.
10. Services to be confirmed to allow for coordination.
11. Existing drainage unknown and to be confirmed.
12. Site constraints from underground HV cables and access to OHL to be confirmed.
13. For permanent drainage layout drawing refer to BING4-LT521-SEBAM-DRAI-ZZ-D-C-0150.
14. Suds features may require to be lined if contamination identified by ground investigations.
15. Details are indicative only.
16. Proposed layout is for estimated costing purposes only. All drainage elements will be finalised and sized at detailed design.
17. All ditches are assumed to be lined for the purposes of the interim costing estimate drawings. Final details to be confirmed at detailed design stage.

REV:	DATE:	DRWN:	CHKD:	APPVD:	DESCRIPTION:
P01	23/10/25	CMcL	RD	RJM	ISSUED FOR PLANNING

STATUS: S5 ISSUED FOR FINAL REVIEW

CONTRACTOR:

SIEMENS energy + bam

Joint Venture
Substation Delivery
Framework

CLIENT:

Scottish & Southern Electricity Networks
TRANSMISSION

PROJECT: LT521 - BINGALLY 400kV SUBSTATION

PROJECT NUMBER: BING4-LT521 | LOCATION: BINGALLY

TITLE: PROPOSED DRAINAGE DETAILS

DRAWN:	C.McLaughlin	ENG CHECK:	R.Duncan
DESIGNER:	A.Peters	COORDINATION:	R.Duncan
SCALE :	1:2500	APPROVED:	R.Minto
DATE OF FIRST ISSUE:	06/02/2025	SECURITY:	

ORIGINATOR DRAWING NUMBER: BING4-LT521-SEBAM-DRAI-ZZ-D-C-0194 | SHEET No: 1 of 1

CLIENT DRAWING NUMBER: BING4-LT521-SEBAM-DRAI-ZZ-D-C-0194 | REV. No: P01